Dunster House

Bongani Thatched Gazebo **W3.3m x D3.3m**

Everything you need for your

PERFECT

GARDEN

Bongani Thatched Gazebo

W3.3m x D3.3m

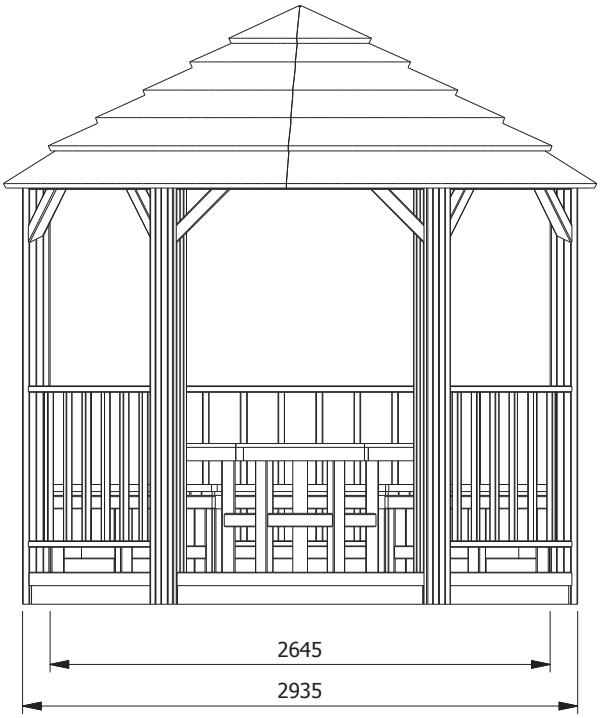

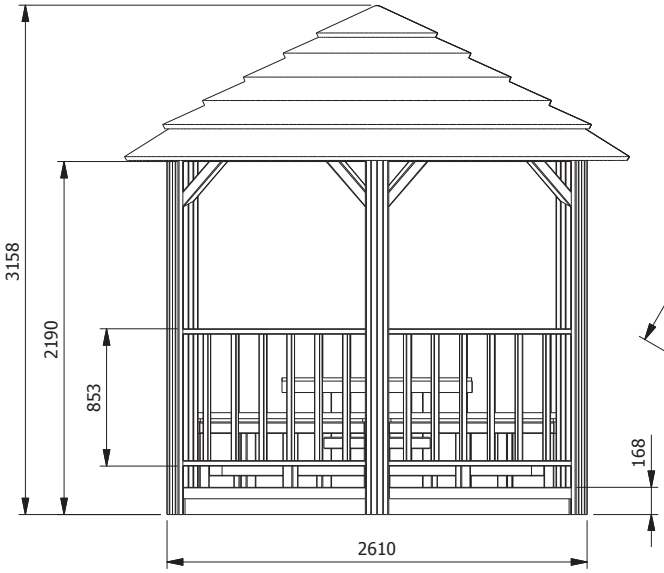

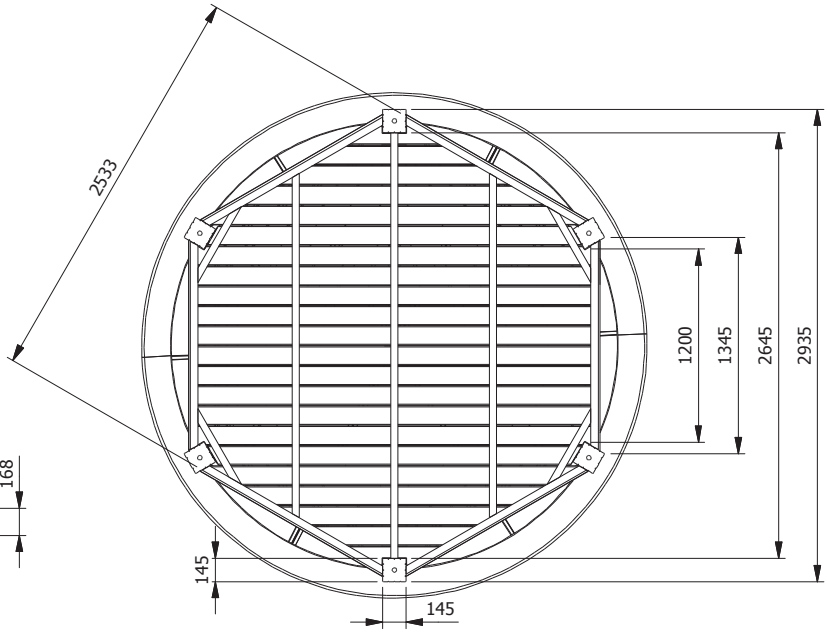

DIMENSIONS:

External Width	3.3m (10' 9")	**Internal Eaves Height**	2.1m (6' 10")
External Depth	3.3m (10' 9")	**Walkthrough Height**	2.1m (6' 10")
Overall Height	3m (9' 10")		

FEATURES:

Roof Structure: Galvanised Steel Guaranteed against rust causing structural failure for 10 years
Roof Design: Genuine African Cape Reed Thatch
Square Posts: 145mm Main Posts

OPTIONAL EXTRAS:

PremiumPlus Rapidpad
Decking
Balaustrades
Benches
Table
Curtains
Solid wall panel
Three-sided 1.8KW pendant heater with down-light
Bench cushions
Canopy inner lining

All measurements given are approximate.